Permit No._____ Date:_____

BEAR LAKE COUNTY ENCROACHMENT PERMIT

Name:_____ Phone number:_____

Address:_____

_____

_____

Application of right-of-way encroachment is herby granted, subject to the Regulations for the Control and Protection of County Road of Way Legally required and other general safety requirements, the approval plan and any special limitations set forth herein. Permission is requested for the purpose of

_____

_____

_____

In the following location_____

The work shall commence_____

In the event work is commenced under this permit, the applicant agrees to prosecute the same to completion by the date herein above specified. In the event the applicant fails or refuses to complete the work, the County Road Department may, at its election, fill in or otherwise correct any existing impediments and the applicant aggress to forfeit his $_____ deposit in compensation therefore.

The applicant shall be required to deposit $_____ with the County at the time of application. This deposit will be retained by the County until the applicant completely restores the County right-of-way, disturbed by the applicant, to its original condition. If the right-of-way is not restored to its original condition by the applicant, the County may do so with its own forces and the $_____ will be retained by the County as compensation for the restoration work. If it costs more than $_____ to restore the right –of-way, the applicant aggress to pay the balance within 30 days of billing.

An inspection fee of $_____will be required to accompany this application. ***The inspection fee will not be refunded***

Before work permitted herewith is commenced, the applicant must notify **Greg Skinner @ 208-847-1061**, and commencement of said work of understood to indicate that the applicant will comply with all instructions and regulations of Bear Lake County with respect to performance of said work and that he will properly safeguard said work to prevent accident and shall indemnify and hold harmless Bear Lake County from all damages arising out of any and all operations performed under this permit.

Permittee shall not perform any work on County road-of-way beyond those areas or operation stipulated on the permit. If because of the future construction or other causes, the County wishes the encroachment removed or relocated, the permitte will do so after 30 days notice at his expense.

If applicant fails to comply with County regulations, specifications, or instructions pertinent to this permit, the County Road Supervisor or his duly authorized representative may by verbal order, suspend the work until the violation (s) is corrected. If the applicant fails or refuses to comply promptly, the County Road Supervisor or his duly authorized representative may issue a written order stopping all or part of the work. When satisfactory corrective action is taken, an order permitting resumption of work any be issued.

In the event the applicant fails to perform any of the conditions of this permit and it is necessary to resort to any legal actions, the applicant agrees to pay reasonable attorney fees and court costs incurred in said action.

This permit is binding upon the heirs, successors, and assigns of the applicant.

_____
Signature of Applicant

_____
Bear Lake County Corporations
By County Road Supervisor-Permit Officer

Note: The $15.00 inspection fee and the $_____ deposit will be waived for the driveways that do not encroach upon the traveled way of the County road.

OFFICAL USE ONLY

Refund clearance for_____ **Is herby given**_____
Date_____

Criteria for digging across County Roads

1. Must obtain a permit. Can get this at Bear Lake County Court House.

2. Deposit money depending on road type: _____for gravel, _____for paved.

3.. Control or monitor traffic, flaggers or signs.

4. At no time should the road be totally closed for traffic.

5. Call the dig-line if needed.

6. When back filling-use good dry gravel.

7. Haul wet, muddy debris away, use a waky paker or similar equipment to compact every eight inches.

8. Use felt to line trench if needed.

9. Return road to original or better condition. (Gravel to gravel, asphalt to asphalt.)

10. Call Road and Bridge Supervisor (847-1061) to inspect work or if you have any questions. He will then sign off if completed correctly and return check.

Bear Lake County

June 11, 2001

Driveway and driveway approach standards:

- Access driveways for single family dwellings shall be a minimum of 12 feet wide.
- The driveway approach is defined as: From the edge of the public road to the edge of the right of way (ROW) or from the edge of the public road 20 feet, which ever is greater.
- Driveway approaches onto roads shall not exceed 8% grade as calculated from the nearest shoulder elevation.
- Driveway approaches shall be a minimum of 12 feet wide, with a curve radius of 5 feet. See attached drawing of "Typical Driveway Approach"
- A driveway approach shall not extend beyond the edge of the road on to the road.
- No access driveway to a public road shall be within 20 feet of any intersection.
- Where required for drainage, driveways and approaches shall be constructed over a minimum 12 in culvert capable of supporting a load of 40,000 ponds. Culverts may be either corrugated metal pipe, reinforced concrete pipe or other acceptable material. Culvert length shall extend 1 foot beyond the area filled by the construction of the driveway approach.
- Single family building lots are encouraged to share driveways to reduce the number of access points along a road and thus aid in the safety of the road.
- Frontage roads may be required for developments with more than four lots along public roads.
- Driveway approaches should be competed before building construction is completed.
- Clear vision triangles should be provided for all access driveways. Clear vision triangles includes the area defined by extending a line between two points, one on the lot line paralleling the road, and one on the outer edge of the driveway, each of which is 15 feet from the point where the driveway crosses the lot line. No visual obstructions such as solid fence, wall, planter, hedge or shrub more than three feet in height above the grade of the adjoining road shall be permitted in this triangle area. Trees shall be permitted but all branches to a height of seven feet above grade shall be removed.
- These standards could be checked at the time of the building permit being issued.

TYPICAL DRIVEWAY APPROACH

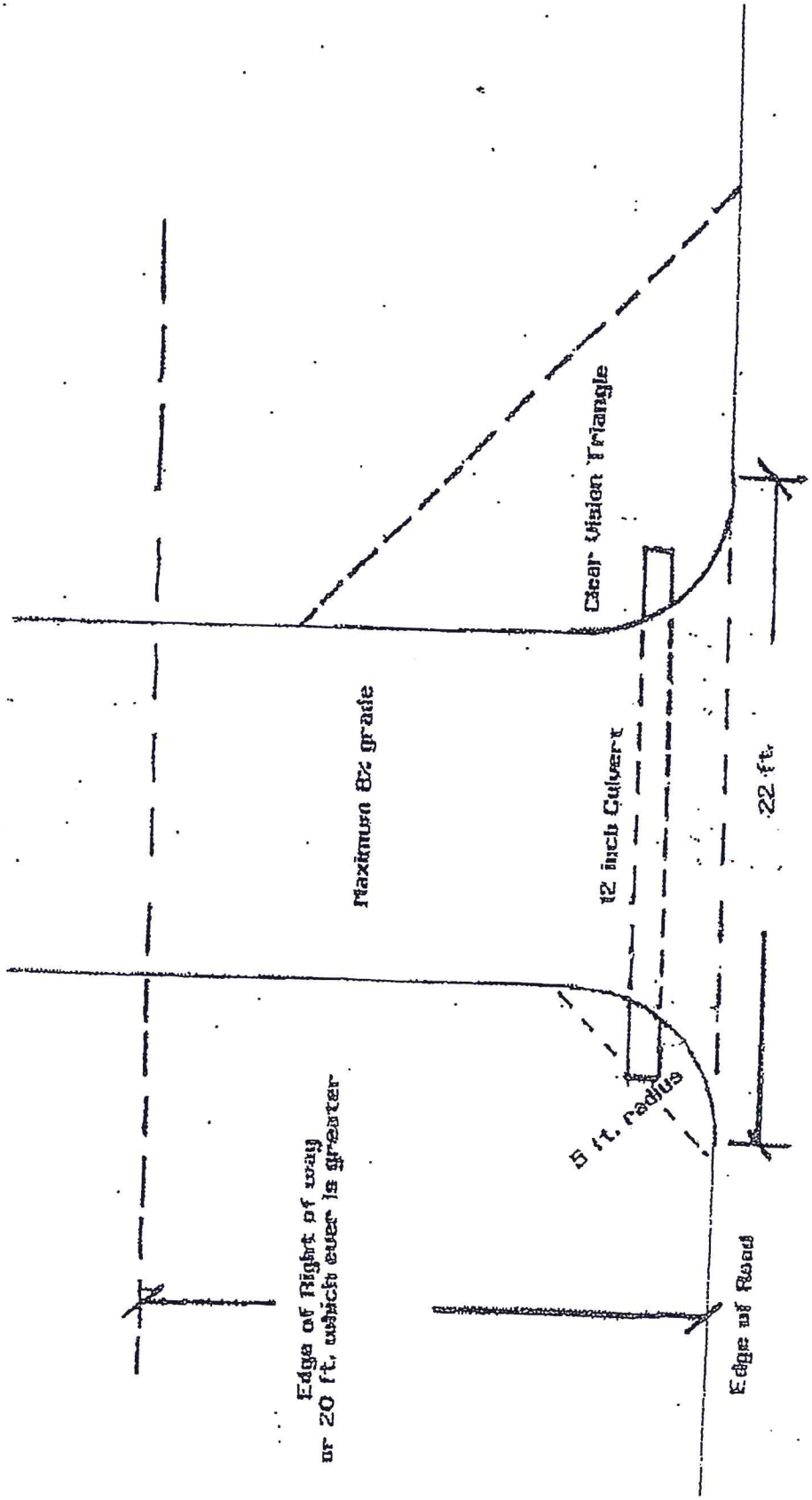

CURB & GUTTER SECTIONS

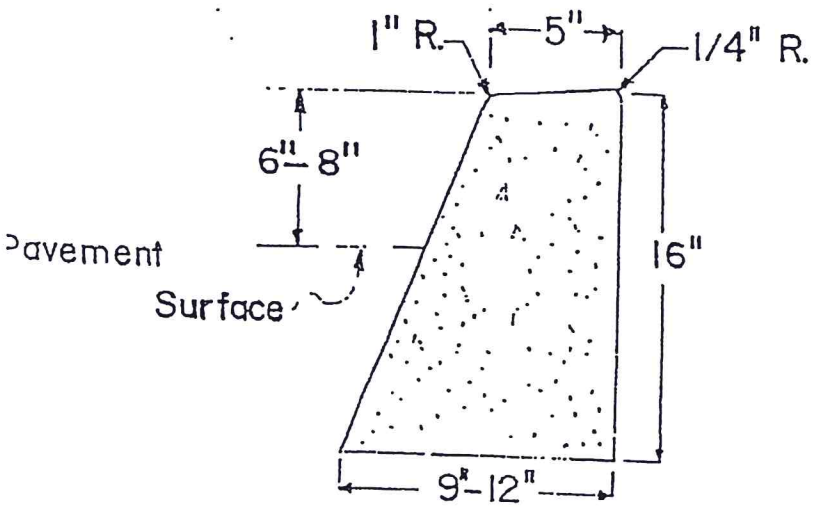

Figure D.

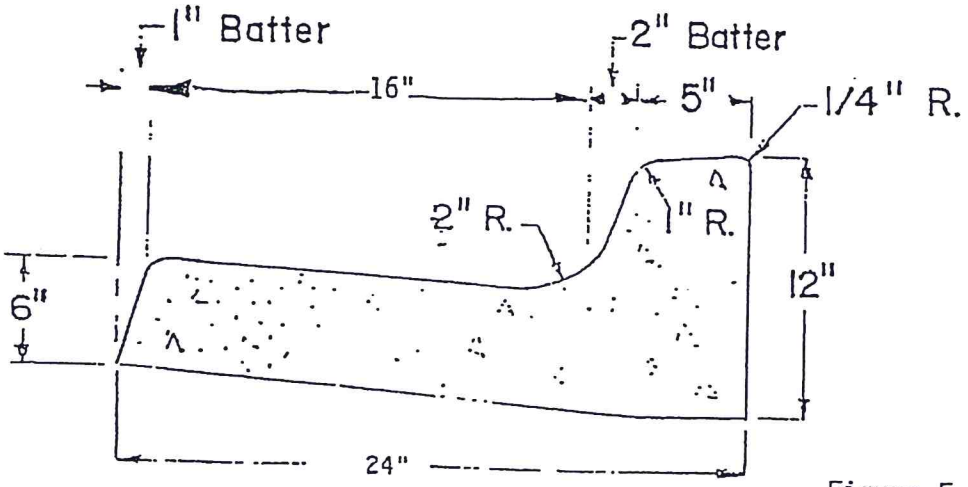

Figure E.

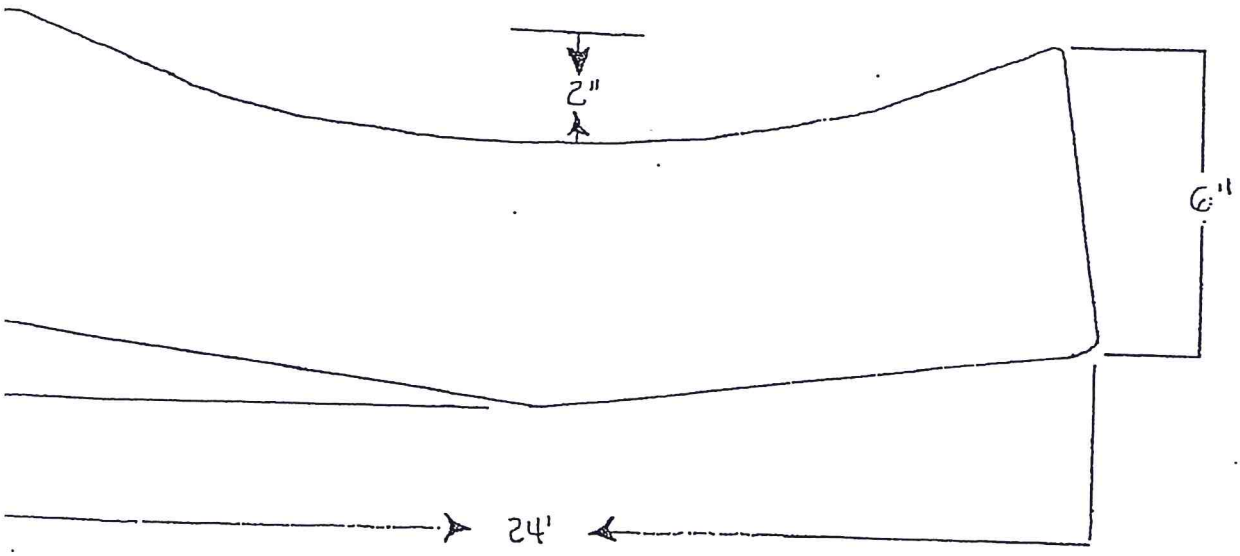

Figure F.

Bear Lake West HOA

Culvert Installation

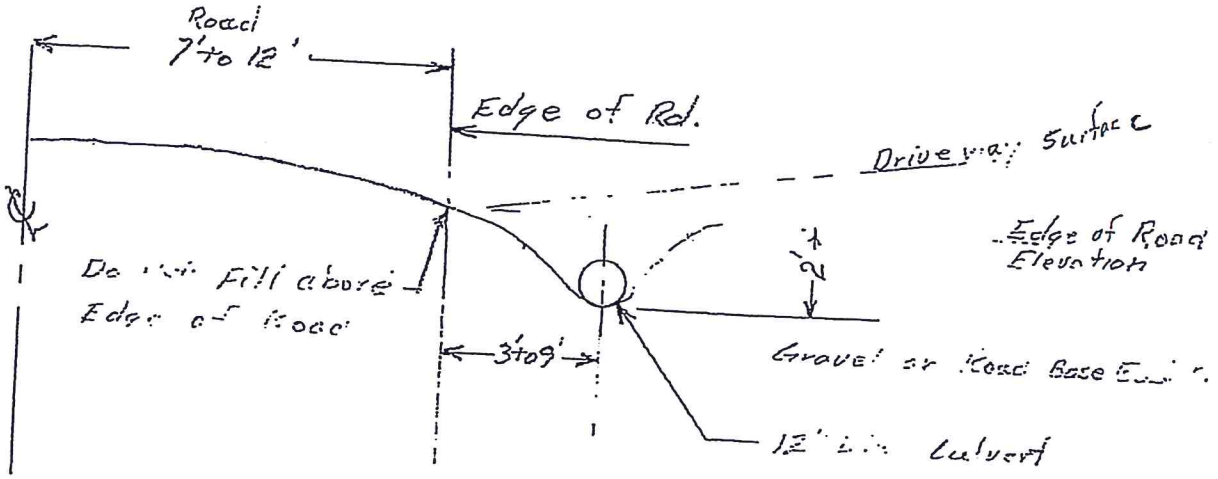

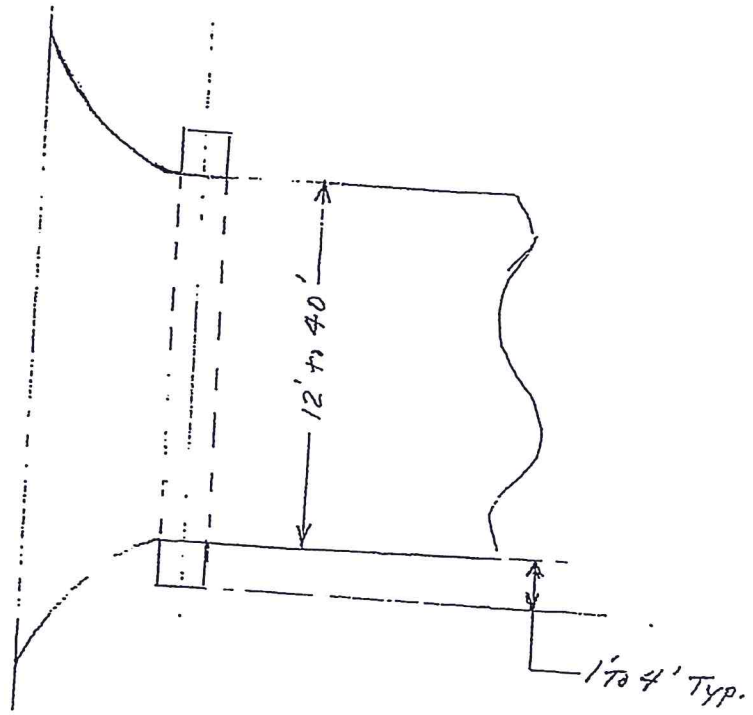

Ref. Bear Lake County Land Use Ordinance 9-1-07